Agilent EEsof EDA

Proposed System Solution for 1/f Noise Parameter Extraction

This document is owned by Agilent Technologies, but is no longer kept current and may contain obsolete or inaccurate references. We regret any inconvenience this may cause. For the latest information on Agilent's line of EEsof electronic design automation (EDA) products and services, please go to:

www.agilent.com/find/eesof

Agilent Technologies

Proposed System Solution for 1/f Noise Parameter Extraction

Roberto Tinti, Franz Sischka*, Chris Morton
Agilent Technologies Comms EDA
1400 Fountaingrove Pkw, Santa Rosa, California 95403
*Agilent Technologies Comms EDA Sales, Germany
email: roberto_tinti@agilent.com, franz_sischka@agilent.com

Abstract

This paper describes a measurement setup for measuring the 1/f noise of Bipolar and MOS devices. The measurement system is currently being investigated by Agilent Comms EDA and is both applicable to on-wafer or packaged devices. The Agilent IC-CAP program controls the instrumentation, acquires the noise measurement data and performs the extraction of the noise parameters according to the noise model description. The device is biased combining the Agilent 4142 or 4156 parametric analyzers and the Stanford Research SR570 low noise amplifier. The output noise is amplified by the SR570 and its power spectrum is measured by the Agilent 35670 dynamic signal analyzer.

1. Introduction

The main sources of noise in semiconductor devices are:

- thermal noise, due to the Johnson effect in the Ohmic regions. It is practically frequency independent.
- shot noise, due the diffusion and passage of carries across barriers. This noise can be represented by independent random events. Its spectral distribution depends on the bias current and is frequency independent.
- flicker noise, also called 1/f noise. This noise is believed to be caused by surface recombination due to traps and defects in the crystal.
- burst noise, due to the capture and emission of carriers in localized traps which cause fluctuation between current levels. It is usually present in small devices and Si-SiO2 interfaces (e.g. MOS).

Due to their broadband spectral distribution, thermal and shot noises contribute to the circuit noise figure. The circuit (in terms of bias, gain, matching networks, etc.) is usually optimized to minimize or lower the noise figure. Although the flicker noise is generated at low frequencies, its contribution to the overall noise might be very significant to some RF circuits since its spectral power density is up converted in the band of interest by circuit nonlinearities. This is especially true in mixers and oscillators.

When measuring 1/f noise, the challenge is to be able to measure the noise introduced by the DUT without the contribution of the rest of the system (bias sources, amplifiers, power line frequency etc.). Historically, there have been several approaches on how to effectively measure the 1/f noise. Two different methods are illustrated in Figure 1. The first approach in Figure 1a originates from an earlier investi-

gation carried out within HP/Agilent and reported in [1]. This setup uses two additional low-pass filters in series with the 4142 bias SMUs. The output noise spectrum is measured by the dynamic signal analyzer. Both instruments can be controlled by IC-CAP. The second setup [2, 3] is shown in Figure 1b and is similar to that in Figure 1a, but battery operated. A phase noise measurement system (HP 3048) is used, using the base band input of the phase-noise interface HP 11848 as a low-noise preamplifier. The signal is analyzed by the FFT Analyzer HP 3561 for frequencies below 100 KHz and by the spectrum analyzer HP 71000 for frequencies above 100 KHz. Other commercial solutions are available that use the same approach shown in Fig 1a, with two filtered SMUs and the dynamic signal analyzer to measure the output.

This paper focus on a more recent solution which is based on [4] and was evaluated for packaged transistor at Infineon AG, Munich, [5]. The setup was then extended to be used also for on-wafer measurements [6]. It is based on the idea of using a low noise current amplifier [7], the Stanford Research SR570.

2. Flicker noise modeling

Let's first review the state of the art on 1/f noise modeling and then the 1/f noise setup will be described with more details. The 1/f noise spectral power density is given by [8]:

$$S_{1/f}(f) = K_f \cdot \frac{I^{A_f}}{f}, \tag{1}$$

where K_f and A_f are the model parameters that needs to be extracted, I is the current flowing through the junction where the flicker noise is generated. Figure 2 shows the small signal equivalent circuits of bipolar and MOS transistors. All the noise sources, including thermal and shot, are represented. In bipolar transistors the noise is generated by the recombination current in the base, therefore $I = I_b$. The 1/f noise is represented by the current source I_{nb}. Its squared mean value is given by:

$$\langle I_{nb}^2 \rangle = \int_B S_{1/f}(f)\,df, \tag{2}$$

where B is the frequency band of interest. In FET and MOS devices the noise is generated in the channel therefore $I = I_d$. In the MOS equivalent circuit of Fig. 2, the 1/f noise is represented by the current source I_{nd}. The expression for the density is:

$$S_{1/f}(f) = K_f \cdot \frac{I_d^{A_f}}{f^{Ef} \cdot C_{ox} \cdot L_{eff}^2} \tag{3}$$

The BSIM3 model for MOSFETs offers also a more complex description which includes some other device parameters. Like with BSIM3 in equation (3), some models, e.g. VBIC, also offer a parameter E_F to model the 1/f slope. The goal is to be able to measure the noise spectrum at low frequencies, where the 1/f noise is dominant, and at several bias points in order to extract the parameters K_f and A_f. K_f is determined by the slope of Power vs. Frequency characteristics while A_f is extracted by varying the bias current.

In both cases, bipolar or MOS, the noise phenomena is related to the current flowing through the device and the formulation gives the spectral density of a random noise current source. The bipolar transistor is by nature a current amplifier and the power noise spectrum of the base current is simply amplified by a factor h_{fe}^2 at the output (h_{fe} is the small signal current gain). Having considered this, the most natural choice for amplifying the device output noise is to use a current amplifier. The low noise current amplifier converts the output current noise into voltage, avoiding current to voltage conversions in the circuit which depend on other circuit parameters and therefore introduce errors.

3. Noise measurement setup

Figure 3 shows the block diagram of the measurement setup. The input bias is accomplished by using a 4142 (or 4156) parametric analyzer and a 1 or 10 Hz filter. The filter eliminates the line noise from the bias source. When measuring bipolar devices, the filter output impedance, which is typically 50 ohm, has to be increased since such a low value would short circuit the current noise source at the input. The device output is directly connected to the SR570 low noise amplifier. Besides amplifying the output noise, the amplifier provides a current and a voltage supply which are used to bias the device output. The voltage supply allows the setting of the collector or drain voltage while the current source provides an offset current which is used to bias the device. The reason for using the current compensation is that the amplifier works best when the feedback current is minimal (the feedback current flows through R into the device to create the virtual null at the amplifier input). The SR570 can supply an output voltage of up to 5 V and a maximum current compensation of 5 mA. The gain (expressed in terms of sensitivity A/V) can be varied between 10e-3 to 10e-12 A/V. For this application, since the amplifier bandwidth decreases with the sensitivity, only the higher sensitivities which ensure bandwidth of at least 1 KHz are actually used.

The device 1/f noise is amplified and measured by the 35670A dynamic signal analyzer. This instrument is ideal for analyzing signals with a low frequency power spectrum (such as 1/f noise) as opposed to a spectrum analyzer which is used at higher frequency bands. Because of the relatively low frequency range, the dynamic signal analyzer can directly sample the signal over a 1/f period and operate a FFT transform to calculate the spectral density.

An interesting verification of the system performance consists of measuring the noise of a metal film resistors connected as shown in Figure 4. The traces shows the measured noise at input of the amplifier as a function of frequency and at different sensitivity settings. As we expect from the amplifier specifications, the noise floor increases with the sensitivity. The tail effect present in some low sensitivity (high gain) traces is due to the variable bandwidth of the amplifier, depending on the gain setting. There is also some 1/f noise introduced by the instrument.

4. IC-CAP control and parameter extraction examples

As mention already, to extract the noise parameters, A_f and K_f, the 1/f noise spectral density of the noise current source needs to be measured at various bias points. Since the current amplifier does not have a GP-IB control, its settings (bias voltage, current offset and sensitivity) have to be manually set at each bias point. The measurement is therefore semi-automated being the data acquisition and display controlled by IC-CAP. Although IC-CAP provides different model files for bipolar and MOS 1/f noise, the extraction procedure is similar. Figure 5a shows the macros page of the bipolar model file. The procedure consists of three steps and a verification phase.

The I_c vs. V_{ce} DC traces are measured. This is accomplished by running the two macros INIT and MEASURE_DC. The DC current gain, β and the output conductance, g_{ce} are calculated using this data. Based on those data the user is asked to choose the bias points where the 1/f noise will be measured. Figure 3 shows an example of I_c-V_{ce}. Simulated traces are also shown to emphasize the fact that the Gummel-Poon parameters have been extracted already. This allows us to compare simulated and measured noise later in the verification phase.

Running the macro MEASURE_NOISE starts the interactive procedure for measuring the noise. For each bias point, the device is first bias at the base (the macro force_4142 is called), after some time which depends on the filter time constant. The operator is then asked to set the collector voltage, current offset and sensitivity on the SR570. The main macro then calls the dynamic signal analyzer measurement of the output noise. The spectral noise density at the output of the device is given by:

$$S_{ic}(f) = (N_{meas} \cdot S_{SR570})^2 \tag{4}$$

where N_{meas} is the noise measured by the analyzer expressed in $V/\sqrt{Hz}$ and S_{SR570} is the sensitivity of the amplifier. Figure 6a shows the spectral power density traces obtained by measuring the noise at three bias points with different values of the base current I_b and constant collector voltage V_c. In the bipolar case and assuming the DC beta be equal to the small signal current gain, the actual spectral power density of the base current noise source is given by:

$$S_{ib}(f) = S_{ic}(f)/\beta_{tr}^2. \tag{5}$$

The third step is the extraction of the 1/f noise parameters. After selecting a set of traces at constant V_c like those in Figure 6a, a macro linearizes equation (1) as follows:

$$\log(S_{ib}(f)) = \log(K_f) + A_f \cdot \log(I_b) \tag{6}$$

and extracts the A_f and K_f using a linear interpolation in the area where 1/f noise is present. Typically, the interpolation is performed in the first 100 Hz of the 1/f band. Figure 6b shows the results of the extraction. The straight lines represent the fitting of equation (6). Finally, fine tuning between measured and simulated data is performed: typical results are shown in Figure 7.

4. Conclusions

A modeling solution for measuring 1/f noise and extracting the relative noise parameters has been presented and analyzed. Because of its simplicity, this solution proved to be robust and reliable for packaged and on-wafer devices. The setup uses a low noise current amplifier which directly converts and amplifies the device noise without current to voltage transformations. The low noise floor and the bandwidth of the amplifier make it suitable for this particular application. The system is semi-automated: IC-CAP controls the data acquisition and performs the final extraction, the user is required to set the current amplifier.

References

[1] ”Simulating Noise in Nonlinear Circuits Using the HP Microwave and Design System”. Agilent Product Note 85150-4,1993. http://www.agilent.com

[2] IC-CAP Noise Modeling Workshop. Agilent Technologies, Germany and Technical University of Munich, Institute of High Frequency Techniques. Munich, Germany 1998.

[3] F. X. Sinnesbichler, M. Fisher, G. R. Olbrich, “Accurate Extraction Method for 1/f Noise Parameters Used in G-P Type Bipolar Junction Transistor Models”. IEEE MTT-S Symposium, Baltimore, 1998.

[4] C. G. Jakobson, I. Bloom, Y. Nemirovsky. “1/f Noise in CMOS Transistors for Analog Applications”. 19. Convention of Electrical and Electronics Engineers in Israel, 1996. pp. 557-560.

[5] Private communication: G. Knoblinger, Infineon AG, Munich and F. Sischka.

[6] A. Blaum, O. Pilloud, G. Scalea, J. Victory, F. Sischka. “A New Robust On-Wafer 1/f Noise Measurement and Characterization System”. To be published: ICMTS Conference 2001, Kobe, Japan.

[7] Stanford Research SR570 Low-Noise Current Preamplifier. See http://www.srsys.com

[8] A. Van Der Ziel. “Noise, Sources, Characterization, Measurement”, Prentice Hall, 1970.

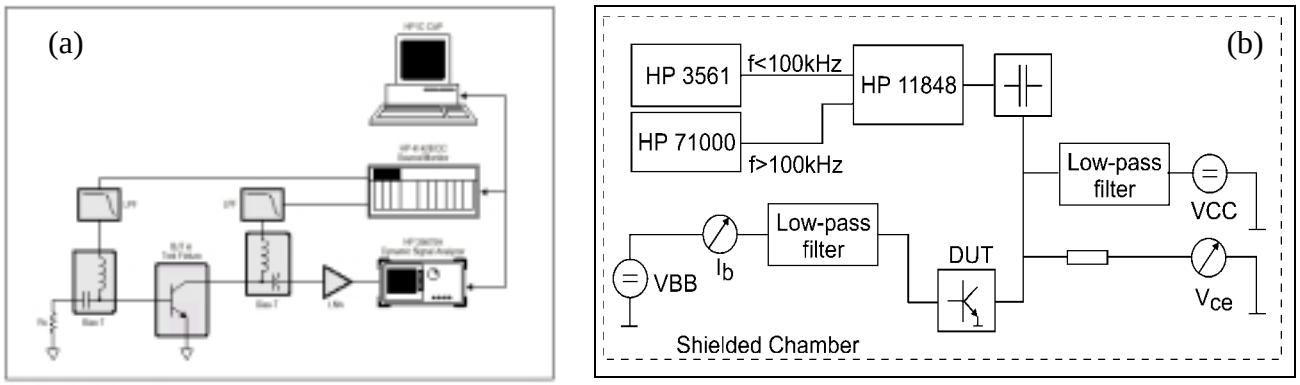

Figure 1: 1/f Noise systems: Agilent 8510-4 application note (a) and University of Munich (b).

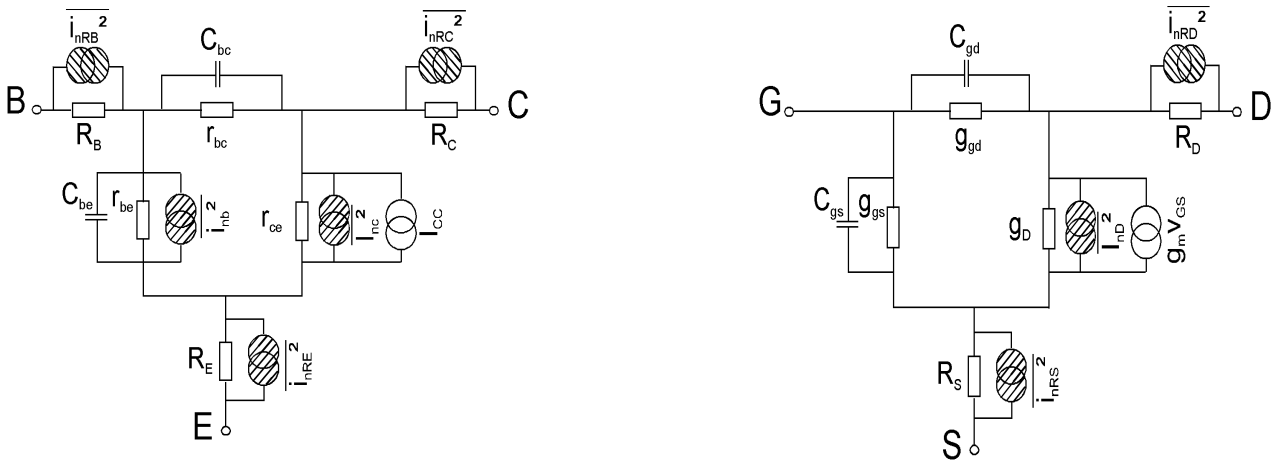

Figure 2: 1/f noise modeling in Bipolar and MOS devices.

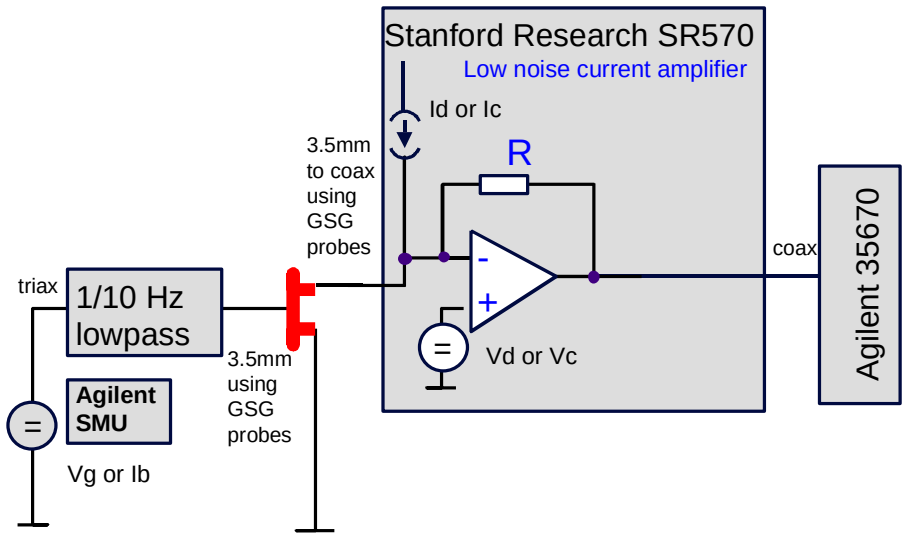

Figure 3: 1/f noise measurement setup.

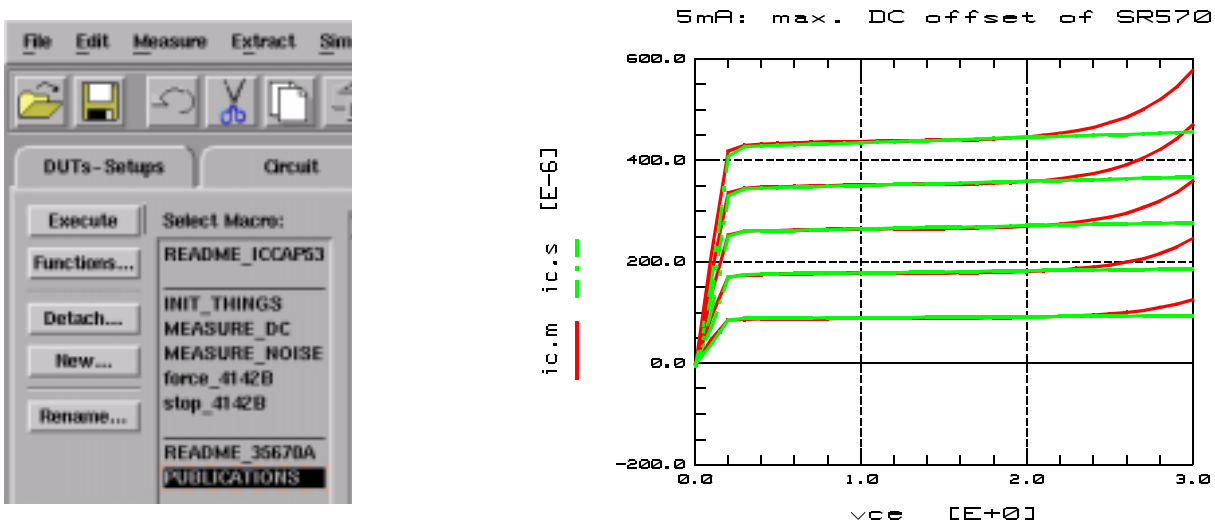

Figure 4: System noise floor measured with a metal film resistance vs. Sensitivity.

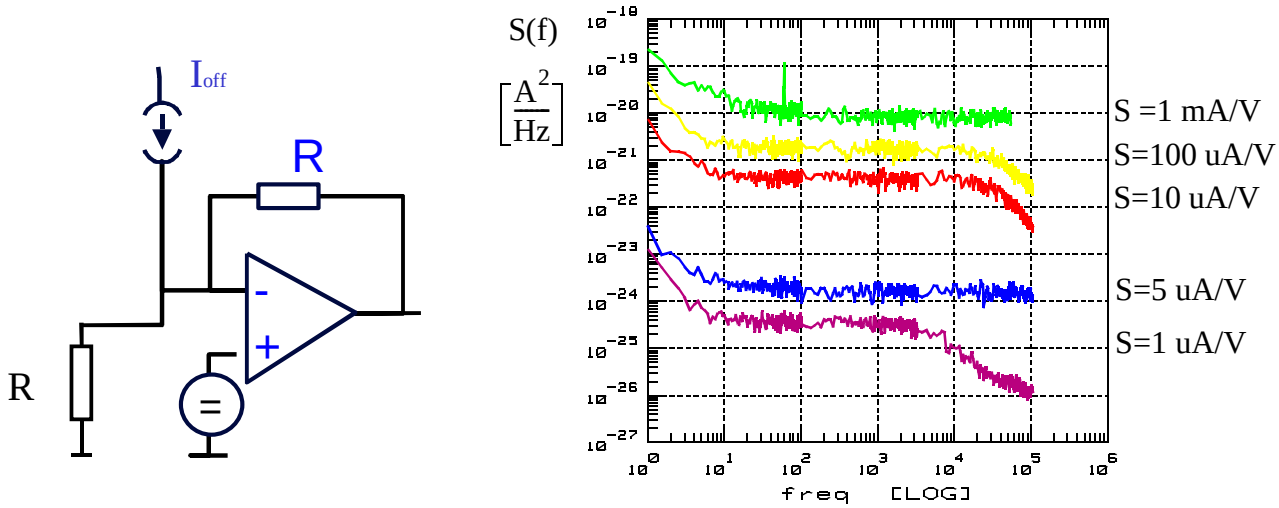

Figure 5: IC-CAP control macros and DC traces (first step).

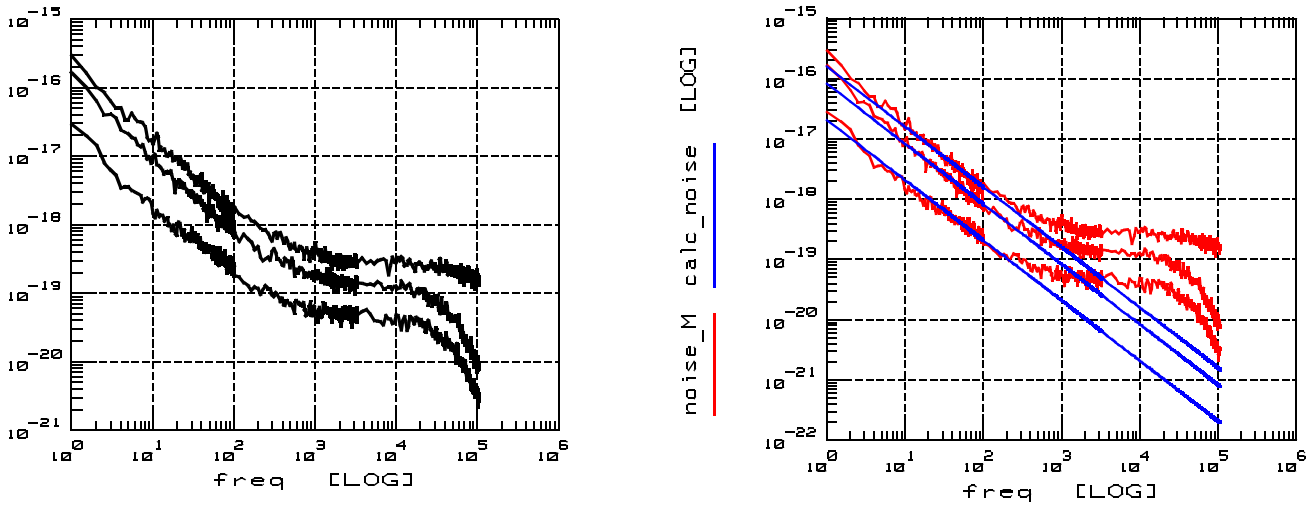

Figure 6: Measurement results and extraction.

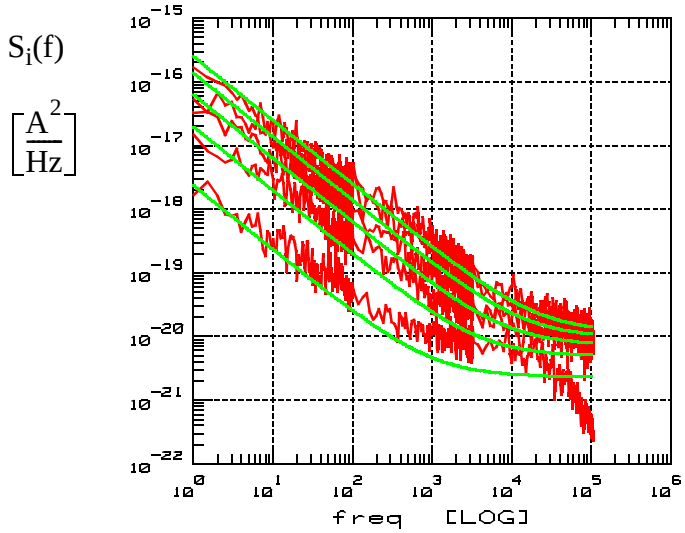

Figure 7: Measured and simulated 1/f noise current spectrum

For more information about Agilent EEsof EDA, visit:

www.agilent.com/find/eesof

Agilent Email Updates

www.agilent.com/find/emailupdates
Get the latest information on the products and applications you select.

Agilent Direct

www.agilent.com/find/agilentdirect
Quickly choose and use your test equipment solutions with confidence.

www.agilent.com

For more information on Agilent Technologies' products, applications or services, please contact your local Agilent office. The complete list is available at:

www.agilent.com/find/contactus

Americas

Canada	(877) 894-4414
Latin America	305 269 7500
United States	(800) 829-4444

Asia Pacific

Australia	1 800 629 485
China	800 810 0189
Hong Kong	800 938 693
India	1 800 112 929
Japan	0120 (421) 345
Korea	080 769 0800
Malaysia	1 800 888 848
Singapore	1 800 375 8100
Taiwan	0800 047 866
Thailand	1 800 226 008

Europe & Middle East

Austria	0820 87 44 11
Belgium	32 (0) 2 404 93 40
Denmark	45 70 13 15 15
Finland	358 (0) 10 855 2100
France	0825 010 700*
	*0.125 €/minute
Germany	01805 24 6333**
	**0.14 €/minute
Ireland	1890 924 204
Israel	972-3-9288-504/544
Italy	39 02 92 60 8484
Netherlands	31 (0) 20 547 2111
Spain	34 (91) 631 3300
Sweden	0200-88 22 55
Switzerland	0800 80 53 53
United Kingdom	44 (0) 118 9276201

Other European Countries:
www.agilent.com/find/contactus

Revised: March 27, 2008

Product specifications and descriptions in this document subject to change without notice.

© Agilent Technologies, Inc. 2008

Printed in USA, December 01, 2000
5989-9087EN

Agilent Technologies